by

Grayson Scott Young, Jr.
B.S., Louisiana State University, 1974

August, 1978

DEDICATED TO

My Mother and Father

TABLE OF CONTENTS

LIST OF FIGURES

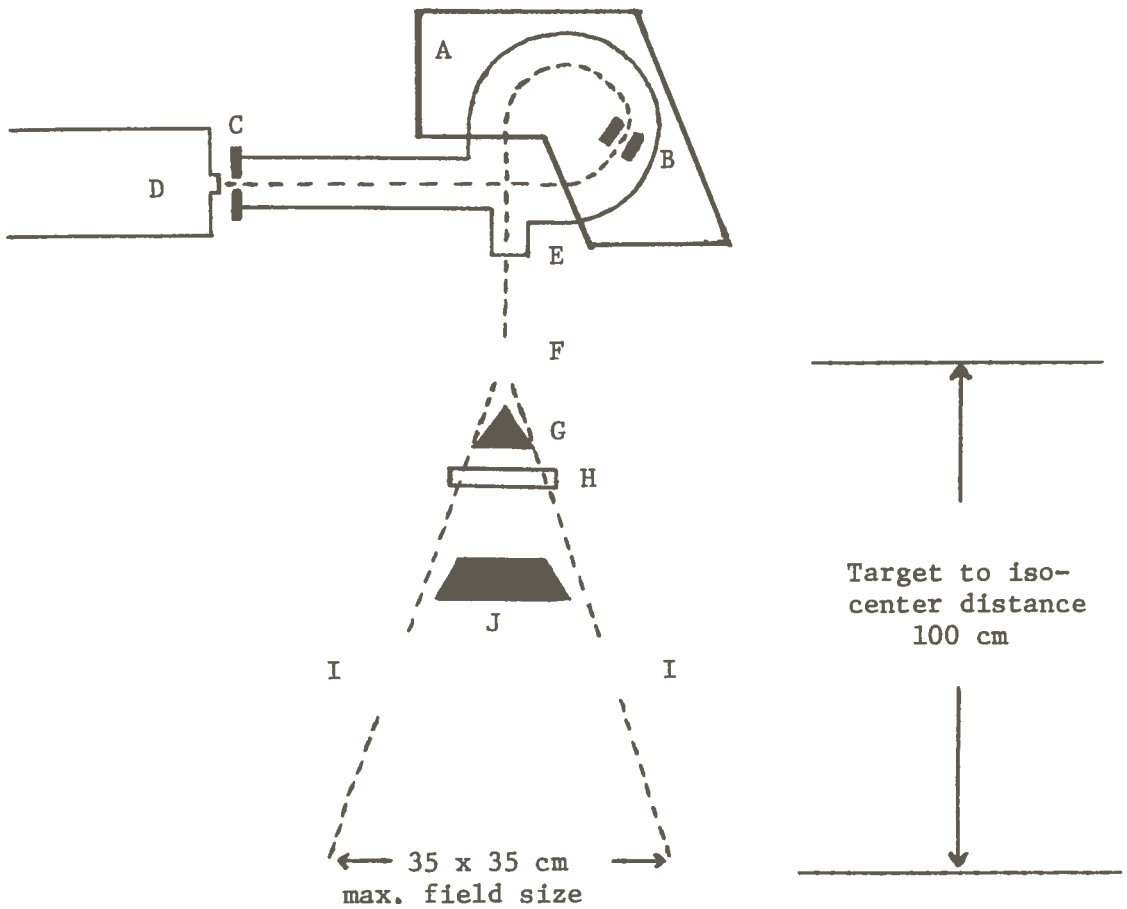
A
B
C
D
E
F
G
H
J
I
I
35 x 35 cm
max. field size
Target to iso-
center distance
100 cm

NaI (Tl) 3" x 3" crystal

Pmt

AMP

MCA

Hv

* No printer (data recorded from pulse-height integration function).

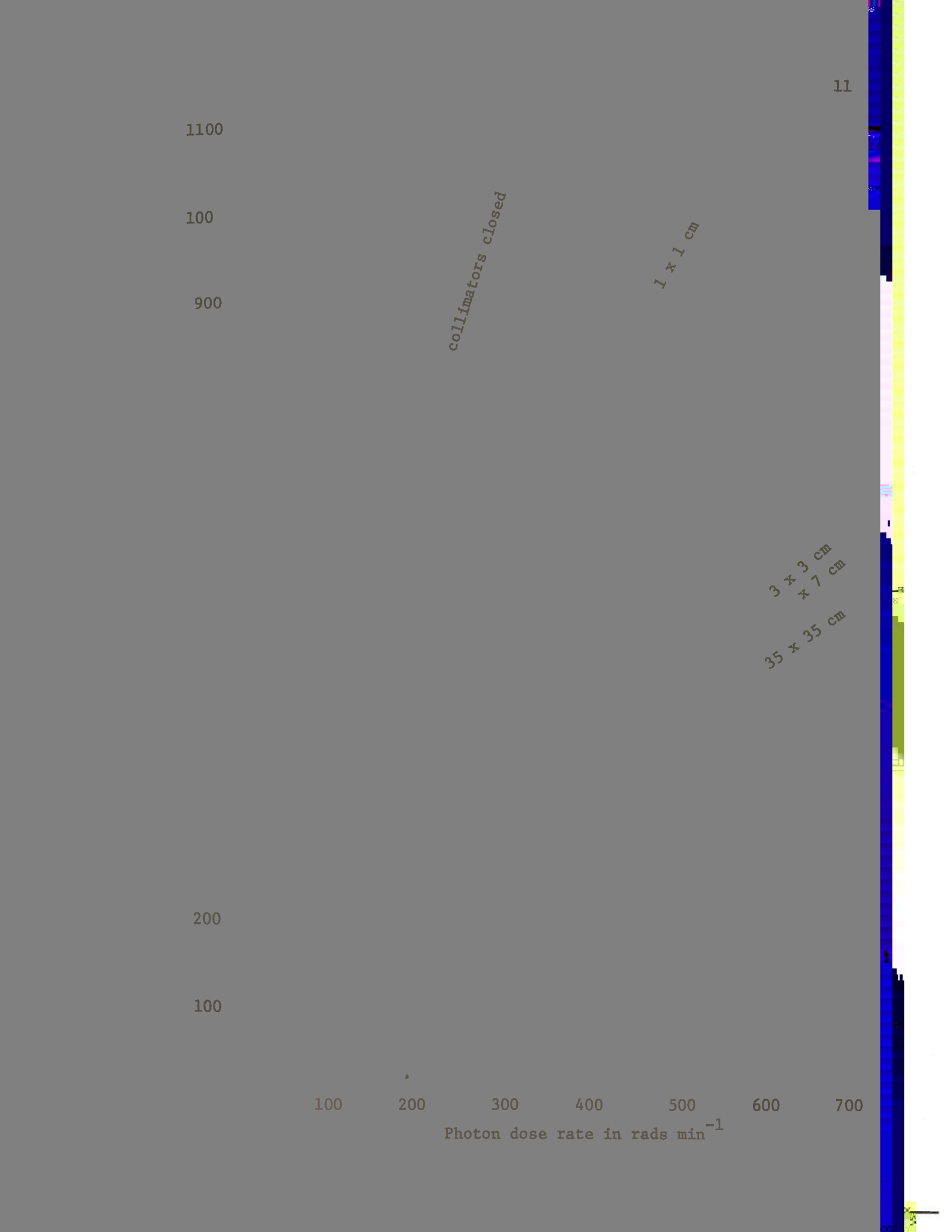
11
1100
100
900
200
100
collimators closed
1 x 1 cm
3 x 3 cm
x 7 cm
35 x 35 cm
100
200
300
400
500
600
700
Photon dose rate in rads min^{-1}

Figure II-3

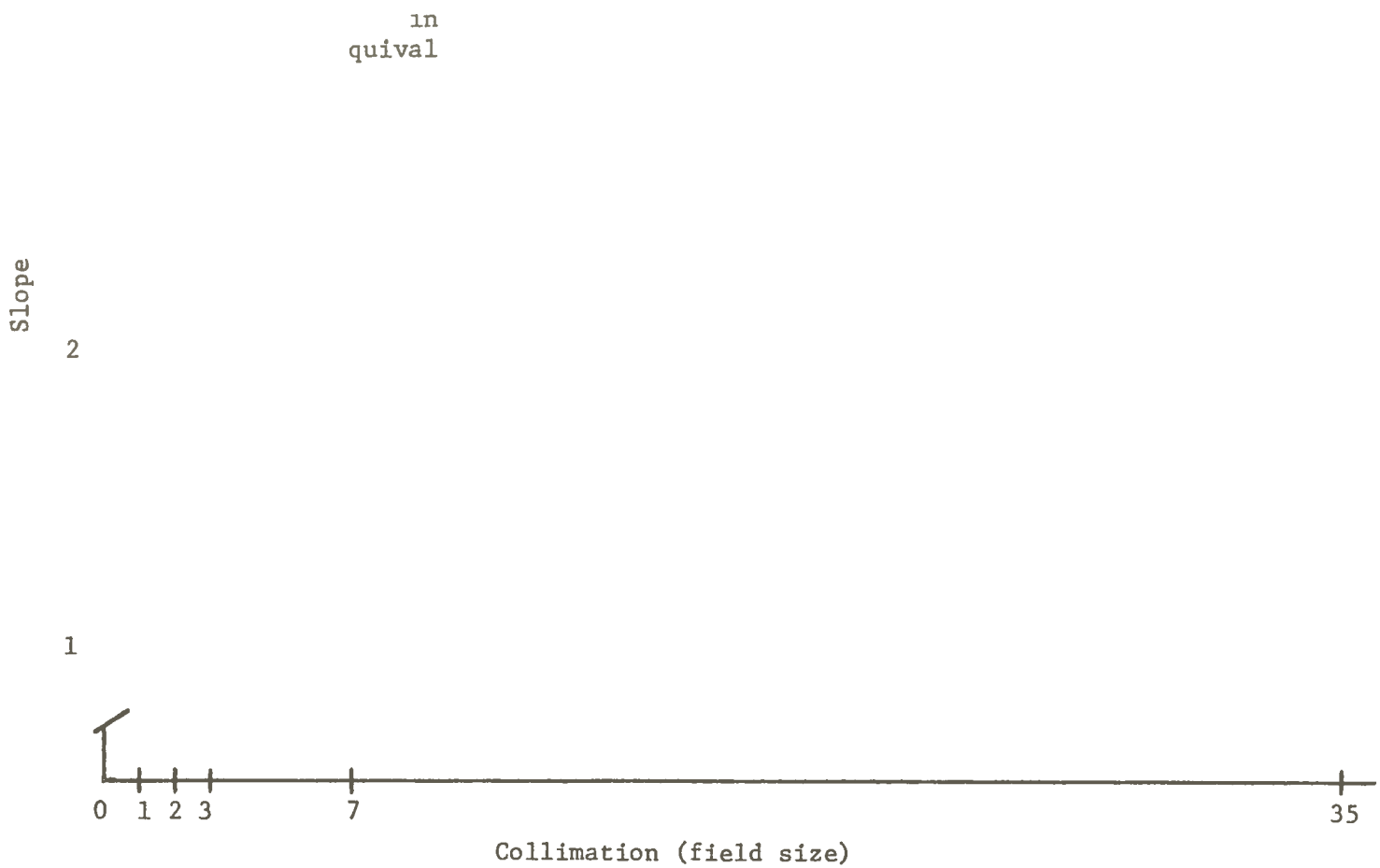

g